UNIVERSITY OF CAMBRIDGE INTERNATIONAL EXAMINATIONS
International General Certificate of Secondary Education

CANDIDATE NAME	

CENTRE NUMBER						CANDIDATE NUMBER					

CHEMISTRY **0620/02**

Paper 2 **October/November 2007**

1 hour 15 minutes

Candidates answer on the Question Paper.

No Additional Materials are required.

READ THESE INSTRUCTIONS FIRST

Write your Centre number, candidate number and name in the spaces at the top of this page.
Write in dark blue or black pen.
You may need to use a pencil for any diagrams, graphs or rough working.
Do not use staples, paper clips, highlighters, glue or correction fluid.
DO **NOT** WRITE IN ANY BARCODES.

Answer **all** questions.
A copy of the periodic table is printed on page 16.

At the end of the examination, fasten all your work securely together.

The number of marks is given in brackets [ ] at the end of each question or part question.

For Examiner's Use	
1	
2	
3	
4	
5	
6	
7	
Total	

This document consists of **16** printed pages.

© UCLES 2007

UNIVERSITY of CAMBRIDGE International Examinations

www.root19.com +91 - 9969 353 391

For Examiner's Use

1 Some oxides are listed below.

calcium oxide
carbon dioxide
carbon monoxide
phosphorus trioxide
sodium oxide
sulphur dioxide
water

(a) Which one of these oxides is most likely to contribute to acid rain?

..... [1]

(b) Which one of these oxides is a product of the reaction between an acid and a carbonate?

..... [1]

(c) Which one of these oxides is formed by the incomplete combustion of carbon?

..... [1]

(d) Which one of these oxides is a good solvent?

..... [1]

(e) Which one of these oxides is used to neutralise acidic industrial waste products?

..... [1]

(f) Which **two** of these oxides reacts with water to form an alkaline solution?

..... [1]

(g) Complete the diagram to show the electronic structure of water.
show hydrogen electrons by 'o'
show oxygen electrons by 'x'

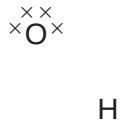

[1]

www.root19.com +91 - 9969 353 391

(h) The structure of phosphorus trioxide is shown below.

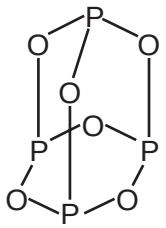

Write the **simplest** formula for phosphorus trioxide.

..... [1]

[Total: 8]

© UCLES 2007
www.root19.com

+91 - 9969 353 591

For Examiner's Use

2 The diagram shows a bottle of mineral water.

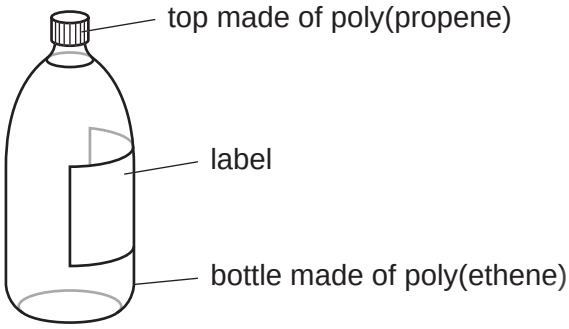

(a) The poly(propene) top is made by polymerising propene molecules, $CH_3CH{=}CH_2$.

(i) Which one of the following best describes the propene molecules in this reaction? Put a ring around the correct answer.

alkanes **monomers** **polymers** **products** **salts**

[1]

(ii) State the name of the homologous series to which propene belongs.

..... [1]

(iii) Propene is an unsaturated hydrocarbon.
State the meaning of the following terms.

unsaturated .....

.....

hydrocarbon .....

..... [2]

(iv) Describe a chemical test to distinguish between an unsaturated hydrocarbon and a saturated hydrocarbon. State the results.

test .....

result with saturated hydrocarbon .....

result with unsaturated hydrocarbon ..... [3]

www.root19.com +91 - 9969 353 391

For Examiner's Use

(b) The poly(ethene) bottle is made by polymerising ethene.

$$nCH_2{=}CH_2 \longrightarrow \text{-}(CH_2\text{–}CH_2)\text{-}_n$$

Complete the following sentence about this reaction by filling in the blank space.

The formation of poly(ethene) is an example of an ..... polymerisation reaction. [1]

(c) The label on the bottle lists the concentration of ions dissolved in the water in milligrams per litre.

concentration of ions in milligrams per litre			
calcium	32	nitrate	1
chloride	5	potassium	0.5
hydrogencarbonate	133	sodium	4.5
magnesium	8	sulphate	7

(i) State the name of **two** negative ions which appear in this list.

..... [1]

(ii) Which metal ion in this list is present in the highest concentration?

..... [1]

(iii) Calculate the amount of magnesium ions in 5 litres of this mineral water.

[1]

(iv) Which ion in the list reacts with aqueous silver nitrate to give a white precipitate?

..... [1]

(v) Which ion in the list gives off ammonia when warmed with sodium hydroxide and aluminium foil?

..... [1]

(vi) Complete the equation to show the formation of a potassium ion from a potassium atom.

$$K \rightarrow K^+ + \text{.....}$$ [1]

© UCLES 2007
www.root19.com

+91 - 9969 353 391

For Examiner's Use

(d) The pH of the mineral water is 7.8.
Which one of the following best describes this pH?
Tick one box.

slightly acidic ☐

slightly alkaline ☐

neutral ☐

very acidic ☐

very alkaline ☐ [1]

(e) Pure water can be obtained by distilling the mineral water using the apparatus shown below.

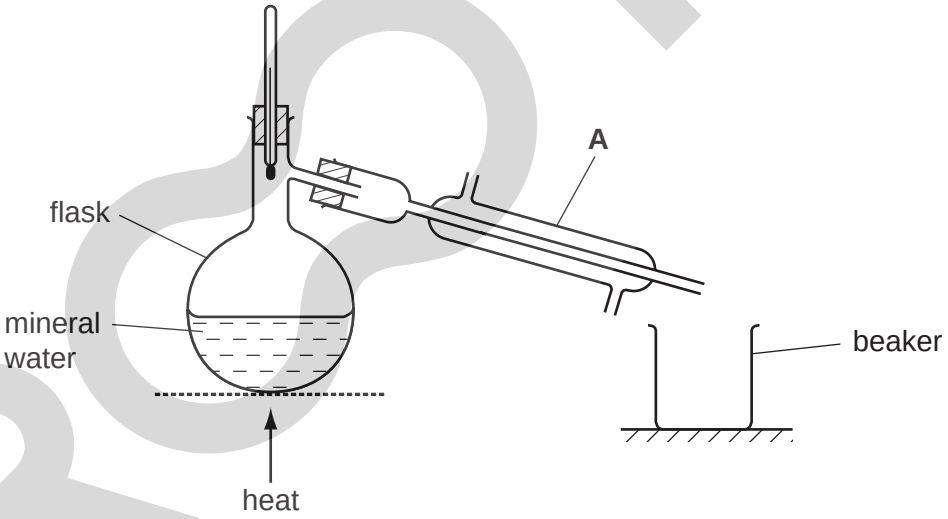

(i) State the name of the piece of apparatus labelled **A**.

..... [1]

(ii) Where does the pure water collect?

..... [1]

(iii) How does the boiling point of the mineral water in the flask compare with the boiling point of pure water?

..... [1]

For Examiner's Use

(f) The diagram shows how mineral water is formed. Mineral water contains no bacteria or particles of earth.

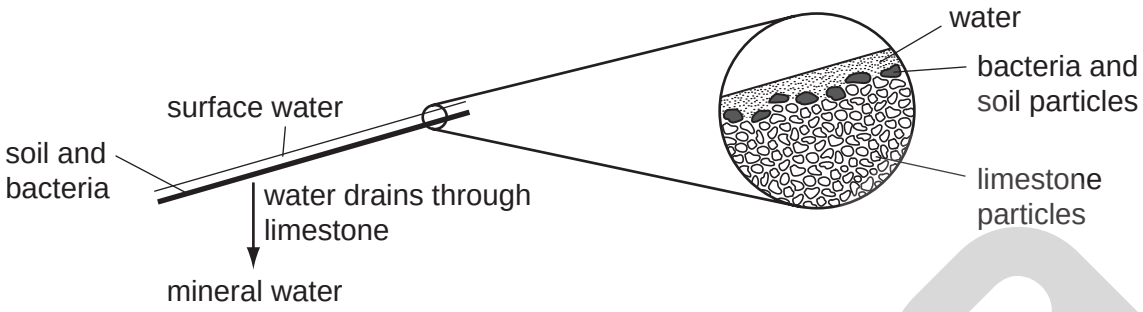

Use the diagram to explain how the water is purified from bacteria and particles of earth.

.....

..... [2]

[Total: 20]

© UCLES 2007
www.root19.com

+91 - 9969 353 591

For Examiner's Use

3 This question is about metals.

(a) Match up the metals in the boxes on the left with the descriptions in the boxes on the right. The first one has been done for you.

silver	a metal used to make aircraft bodies
aluminium	a metal used in jewellery
potassium	a metal extracted from haematite
platinum	a very soft metal
iron	an unreactive metal used for electrodes

[4]

(b) Iron powder reacts rapidly with sulphuric acid to form aqueous iron(II) sulphate and hydrogen.

$$Fe(s) + H_2SO_4(aq) \rightarrow FeSO_4(aq) + H_2(g)$$

Describe **two** things that you would see happening as this reaction takes place.

.....

..... [2]

(c) Alloys are often more useful than pure metals.

(i) Complete the following sentences by filling in the blank spaces.

An alloy is a ..... of a metal with other elements. The properties of ..... can be changed by the controlled use of additives to form steel alloys. Increasing the amount of carbon in a steel makes it ..... [3]

(ii) Name one other alloy apart from steel.

..... [1]

(iii) Iron rusts very easily. Describe two methods of preventing rusting.

1. .....

2. ..... [2]

[Total:12]

www.root19.com +91 - 9969 353 391

For Examiner's Use

4 The diagram shows the changes in pH in a student's mouth after she has eaten a sweet.

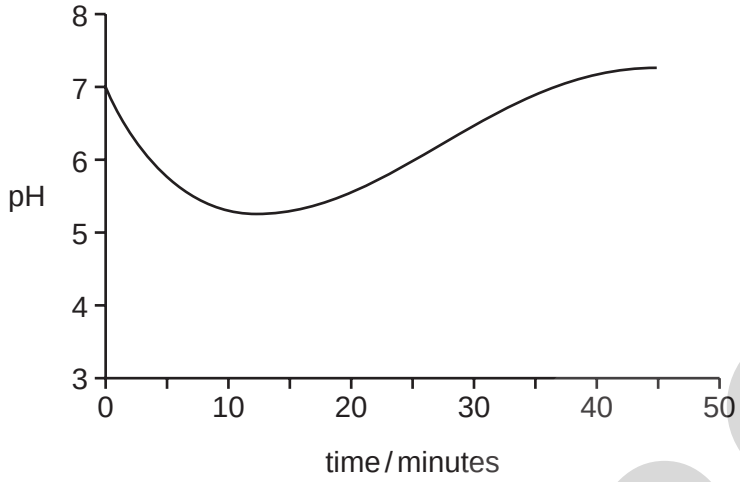

(a) Describe how the acidity in the student's mouth changes after she has eaten the sweet.

.....

..... [2]

(b) **(i)** Chewing a sweet stimulates the formation of saliva. Saliva is slightly alkaline. Use this information to explain the shape of the graph.

.....

.....

..... [2]

(ii) State the name of the type of reaction which occurs when an acid reacts with an alkali.

..... [1]

(c) Many sweets contain citric acid. The formula of citric acid is shown below.

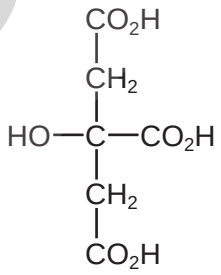

(i) Put a ring around the alcohol functional group on the above formula. [1]

(ii) State the name of the – CO_2H functional group in citric acid.

..... [1]

(iii) Ethanoic acid also has a – CO_2H functional group.
Write down the formula for ethanoic acid.

..... [1]

For Examiner's Use

(d) Citric acid can be extracted from lemon juice as follows:

stage 1: add calcium carbonate to hot lemon juice
stage 2: filter off the precipitate which is formed (calcium citrate)
stage 3: wash the calcium citrate precipitate with water
stage 4: add sulphuric acid to the calcium citrate to make a solution of citric acid
stage 5: crystallise the citric acid

(i) When calcium carbonate is added to lemon juice a fizzing is observed.
Explain why there is a fizzing.

..... [1]

(ii) Draw a diagram to show step 2. Label your diagram.

[2]

(iii) Suggest why the calcium citrate precipitate is washed with water.

..... [1]

(iv) Describe how you would carry out step 5.

.....

..... [1]

(v) Nowadays, citric acid is usually made by the fermentation of sugars.
Which one of the following is required for fermentation?
Put a ring around the correct answer.

acid **high temperature** **light** **microorganisms** **nitrogen**

[1]

[Total: 14]

© UCLES 2007
www.root19.com

+91 - 9969 353 391

For Examiner's Use

5 Some coal dust was heated with copper(II) oxide using the apparatus shown below.

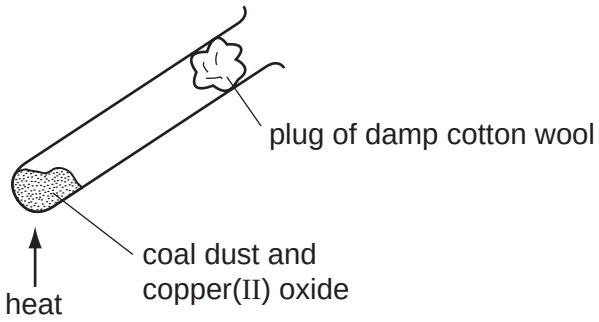

(a) Coal contains carbon and various hydrocarbons. The carbon reduces the copper(II) oxide when heated.

(i) What do you understand by the term *reduction*?

..... [1]

(ii) At the end of the experiment a reddish-brown solid remained in the tube.
State the name of this reddish-brown solid.

..... [1]

(iii) The reddish brown solid conducts electricity.
How could you show that it conducts electricity?

.....

..... [2]

(b) During the experiment, water collected on the cooler parts of the test tube.

(i) Suggest where the hydrogen in the water comes from.

..... [1]

(ii) Water is a liquid.
Describe the arrangement and motion of the particles in a liquid.

.....

..... [2]

[Total: 7]

© UCLES 2007
www.root19.com

+91 - 9969 353 591

For Examiner's Use

6 The table below shows an early form of the Periodic Table made by John Newlands in 1866.

H	F	C*l*	Co, Ni	Br
Li	Na	K	Cu	Rb
Be	Mg	Ca	Zn	Sr
B	A*l*	Cr	Y	
C	Si	Ti	In	
N	P	Mn	As	
O	S	Fe	Sc	

(a) Newlands arranged the elements according to their relative atomic masses. What governs the order of the elements in the modern Periodic Table?

..... [1]

(b) Use your modern Periodic Table to suggest why Newlands put cobalt and nickel in the same place.

..... [1]

(c) Which group of elements is missing from Newlands' table?

..... [1]

(d) Describe **three other** differences between Newlands' table and the modern Periodic Table. You must not give any of the answers you mentioned in parts (a), (b) or (c).

.....

.....

.....

..... [3]

© UCLES 2007
www.root19.com

+91 - 9969 353 391

For Examiner's Use

(e) Carbon exists in two forms, graphite and diamond.

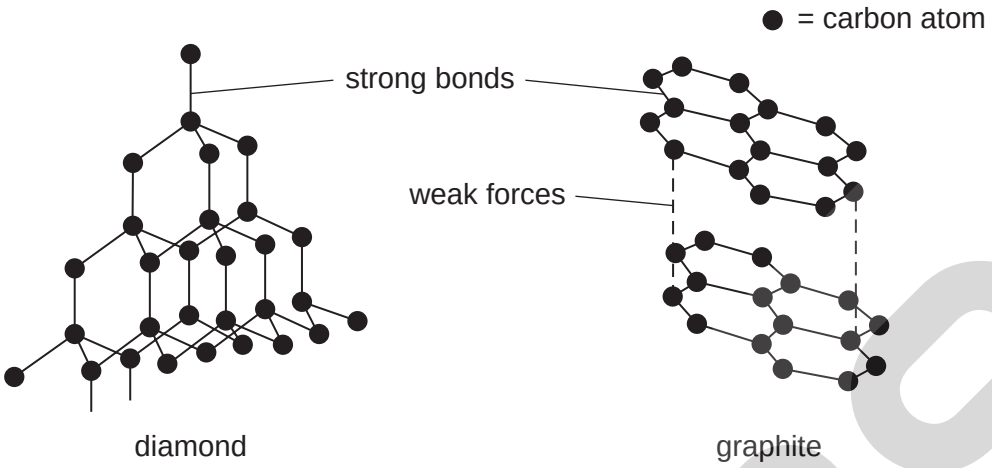

Use ideas about structure and bonding to suggest

(i) why graphite is used as a lubricant,

..... [1]

(ii) why diamond is very hard.

..... [1]

[Total: 8]

© UCLES 2007
www.root19.com

+91 - 9969 353 591

For Examiner's Use

7 Compounds and elements vary in their volatility, solubility in water and electrical conductivity depending on their bonding.

(a) Place copper, methane and water in order of their volatility.

most volatile →	
least volatile →	

[1]

(b) Complete the table to show the solubility in water and electrical conductivity of various solids.

solid	structure	soluble or insoluble	does it conduct electricity?
silver	metallic	insoluble	
sodium chloride	ionic		no
sulphur	covalent		no
copper sulphate	ionic	soluble	

[4]

(c) The apparatus shown below is used to electrolyse concentrated aqueous sodium chloride.

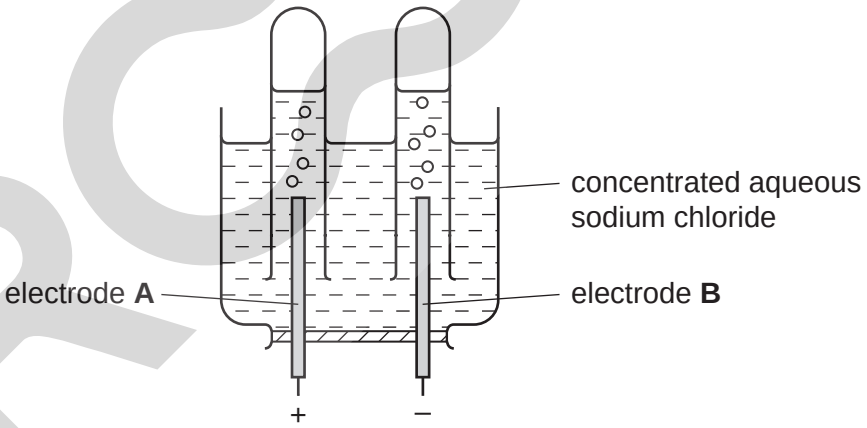

(i) Suggest a suitable substance which could be used for the electrodes.

..... [1]

(ii) State the name of the gas given off

at electrode **A**, ...

at electrode **B**. ..... [2]

www.root19.com +91 - 9969 353 391

(iii) State the name given to electrode **A**.

..... [1]

(iv) Explain why aqueous sodium chloride conducts electricity but solid sodium chloride does not.

.....

..... [2]

[Total: 11]

Permission to reproduce items where third-party owned material protected by copyright is included has been sought and cleared where possible. Every reasonable effort has been made by the publisher (UCLES) to trace copyright holders, but if any items requiring clearance have unwittingly been included, the publisher will be pleased to make amends at the earliest possible opportunity.

University of Cambridge International Examinations is part of the Cambridge Assessment Group. Cambridge Assessment is the brand name of University of Cambridge Local Examinations Syndicate (UCLES), which is itself a department of the University of Cambridge.

DATA SHEET
The Periodic Table of the Elements

Group I	Group II											Group III	Group IV	Group V	Group VI	Group VII	Group 0
							1 **H** Hydrogen 1										4 **He** Helium 2
7 **Li** Lithium 3	9 **Be** Beryllium 4											11 **B** Boron 5	12 **C** Carbon 6	14 **N** Nitrogen 7	16 **O** Oxygen 8	19 **F** Fluorine 9	20 **Ne** Neon 10
23 **Na** Sodium 11	24 **Mg** Magnesium 12											27 **Al** Aluminium 13	28 **Si** Silicon 14	31 **P** Phosphorus 15	32 **S** Sulphur 16	35.5 **Cl** Chlorine 17	40 **Ar** Argon 18
39 **K** Potassium 19	40 **Ca** Calcium 20	45 **Sc** Scandium 21	48 **Ti** Titanium 22	51 **V** Vanadium 23	52 **Cr** Chromium 24	55 **Mn** Manganese 25	56 **Fe** Iron 26	59 **Co** Cobalt 27	59 **Ni** Nickel 28	64 **Cu** Copper 29	65 **Zn** Zinc 30	70 **Ga** Gallium 31	73 **Ge** Germanium 32	75 **As** Arsenic 33	79 **Se** Selenium 34	80 **Br** Bromine 35	84 **Kr** Krypton 36
85 **Rb** Rubidium 37	88 **Sr** Strontium 38	89 **Y** Yttrium 39	91 **Zr** Zirconium 40	93 **Nb** Niobium 41	96 **Mo** Molybdenum 42	**Tc** Technetium 43	101 **Ru** Ruthenium 44	103 **Rh** Rhodium 45	106 **Pd** Palladium 46	108 **Ag** Silver 47	112 **Cd** Cadmium 48	115 **In** Indium 49	119 **Sn** Tin 50	122 **Sb** Antimony 51	128 **Te** Tellurium 52	127 **I** Iodine 53	131 **Xe** Xenon 54
133 **Cs** Caesium 55	137 **Ba** Barium 56	139 **La** Lanthanum 57 *	178 **Hf** Hafnium 72	181 **Ta** Tantalum 73	184 **W** Tungsten 74	186 **Re** Rhenium 75	190 **Os** Osmium 76	192 **Ir** Iridium 77	195 **Pt** Platinum 78	197 **Au** Gold 79	201 **Hg** Mercury 80	204 **Tl** Thallium 81	207 **Pb** Lead 82	209 **Bi** Bismuth 83	**Po** Polonium 84	**At** Astatine 85	**Rn** Radon 86
Fr Francium 87	226 **Ra** Radium 88	227 **Ac** Actinium 89 †															

140 **Ce** Cerium 58	141 **Pr** Praseodymium 59	144 **Nd** Neodymium 60	**Pm** Promethium 61	150 **Sm** Samarium 62	152 **Eu** Europium 63	157 **Gd** Gadolinium 64	159 **Tb** Terbium 65	162 **Dy** Dysprosium 66	165 **Ho** Holmium 67	167 **Er** Erbium 68	169 **Tm** Thulium 69	173 **Yb** Ytterbium 70	175 **Lu** Lutetium 71
232 **Th** Thorium 90	**Pa** Protactinium 91	238 **U** Uranium 92	**Np** Neptunium 93	**Pu** Plutonium 94	**Am** Americium 95	**Cm** Curium 96	**Bk** Berkelium 97	**Cf** Californium 98	**Es** Einsteinium 99	**Fm** Fermium 100	**Md** Mendelevium 101	**No** Nobelium 102	**Lr** Lawrencium 103

*58-71 Lanthanoid series
†90-103 Actinoid series

Key

a	a = relative atomic mass
X	**X** = atomic symbol
b	b = proton (atomic) number

The volume of one mole of any gas is 24 dm^3 at room temperature and pressure (r.t.p.).

© UCLES 2007

www.root19.com
+91 - 9969 353 391